TiefbohrSysteme® GmbH

DEEP HOLE BORING TECHNOLOGY | EQUIPMENT

Counter Boring Tools

Type 1137 / 1108

DEEP HOLE DRILLING TOOLS
BORING RANGE Ø 44,00 - 233,99 mm

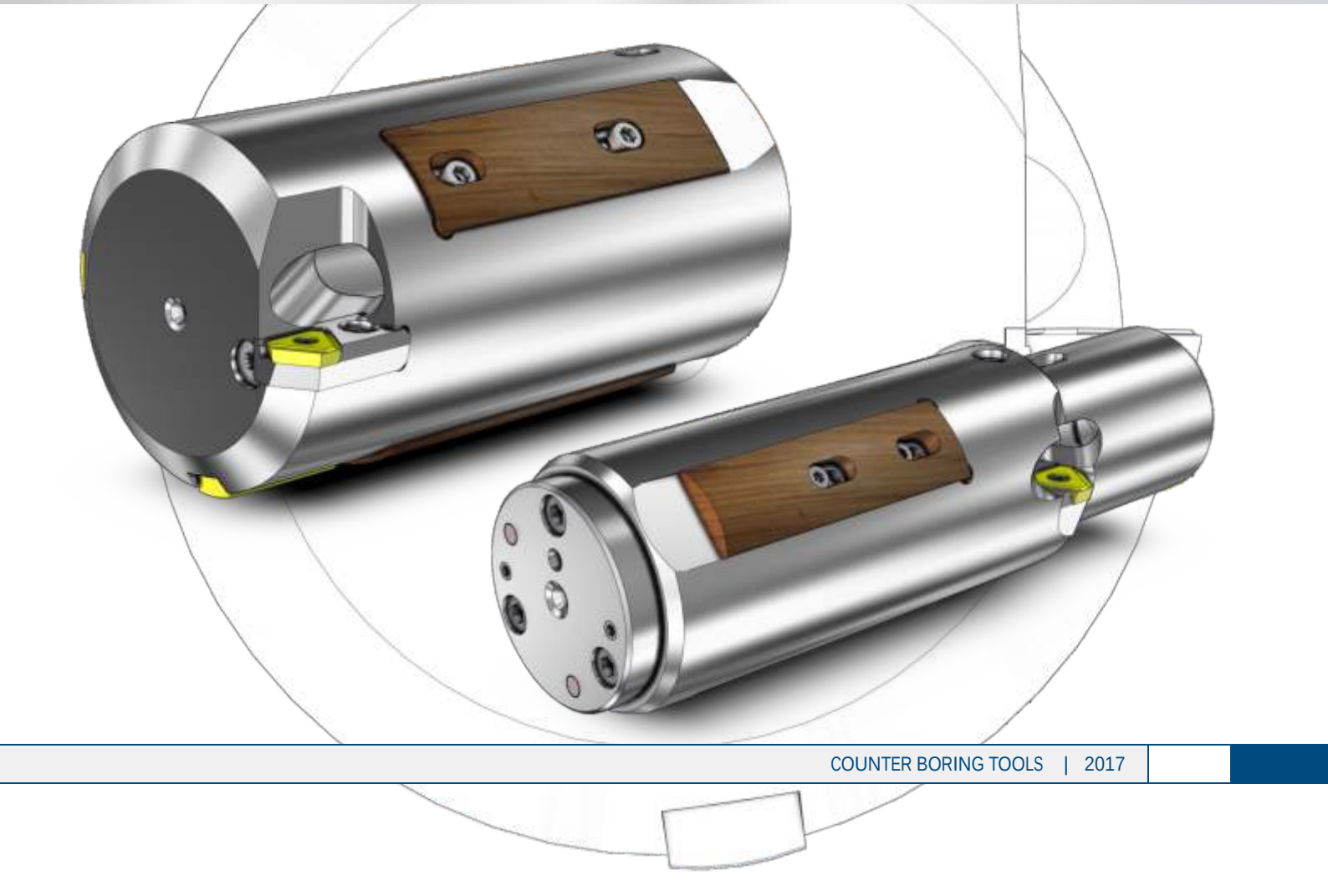

Deep Hole Boring - An Inaccessible World

In today's production world, precision and production strategies are a significant constituent for success. The more complex the production process, the more important are these two factors. deep hole boring our company, BTA-Tiefbohrsysteme GmbH, is the essential partner for implementation even under difficult marginal conditions with high requirements. We are the only company in the world capable of offering our customers everything from inserts to complete, suitable equipent for deep hole boring machines. Our experienced experts are always at your side to ensure proper support from planning your deep hole boring project up to tool services. All this is aimed at your success.

In the company-owned application and research department we can test innovations and special designed tools, customize the tools to user-specific material and train their operators. You will receive tools customized for your application and benefit from our experience.

Our tool systems offer you the following advantages:

- Tools designed for various processes (solid boring, trepanning, counter boring and skiving) with the same effective elements, especially such as inserts and guides. This results in extremely low stocks and simple handling.
- Suitable selection possibilities for tools, corresponding to required boring quality, from simple solid boring to form boring.
- Custom layout of tools for various production requirements to straightness, surface, material and constant wall thickness.
- Equipment matched to the deep hole boring process - from workpiece clamping to vibration damping.
- Production-optimized machinery layout for reducing setup and conversion times.

Here are a few results from production boring with our tools:

- Surface Ra < 0.1 µm e.g. by skiving and roller burnishing
- Mismatch of axes < 0.1mm/m e.g. by pull counter boring
- Hole accuracy < IT8 e.g. by skiving

Benefit from these advantages by cooperating with a strong partner.

BTA-Tiefbohrsysteme GmbH

BTA-TIEFBOHRSYSTEME GMBH | HAINKÄMPE 12 | 28832 ACHIM
TEL +49 (0) 42 02 / 96 84 5 | FAX +49 (0) 42 02 / 96 84 70 | INFO@BTA-TIEFBOHRSYSTEME.COM | **WWW.BTA-TIEFBOHRSYSTEME.COM**

Contents

Contents	3
Counter Boring Tools Type 1137 - „pushed“	4
Counter Boring Tools Type 1108 - „pulled“	5
Spare and wear parts	6

Tool description

- Counter Boring Tools with fixed boring diameter
- Type 1108 especially suitable for boring wich should have a low mismatch of axes
- Available as bta-tool

Tool characteristics

- drilling depth ≤400 x tool diameter
- surface ≥R_a 1,25 µm
- mismatch of axes ≥0,05 mm/m
- drilling accuracy ≥IT8

Counter Boring Tools Type 1137 - „pushed“

Boring range Ø 44,00 - 233,99 mm

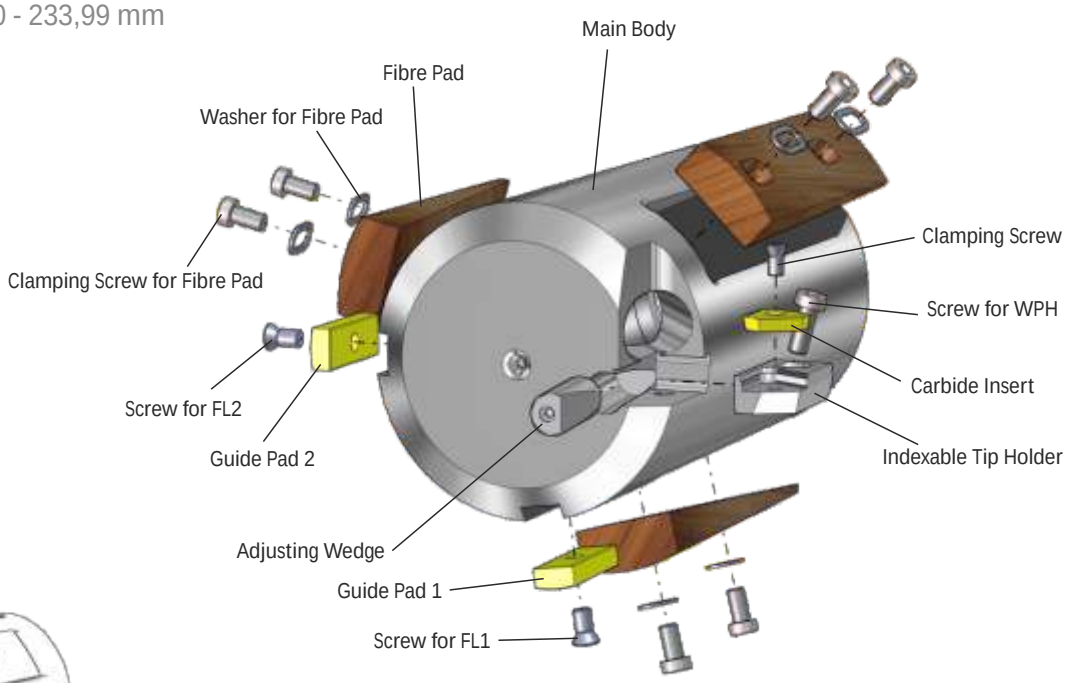

Boring Range	Drill Tube Connection	Carbide Insert pos.1	Indexable Tip Holder	Clamping Screw	Screw for WPH	Guide Pad FL1 and FL2	Clamping Screw	Adjustable Wedge	Fibre Pads
Ø 44,00 - Ø 46,99	36	AK 16 cutting depth: α_p 5 mm	A 14,5 016.4593.X	M4x7,5 *T15*	M4x10 DIN 7984	FL 10 / *R 20*	M4x8,2 *T15*	14,5 017.0569.K	RF 82
Ø 47,00 - Ø 56,99	39								
Ø 57,00 - Ø 60,99	43								RF 83
Ø 61,00 - Ø 67,99	47					FL 10 / *R 28*			
Ø 68,00 - Ø 74,99	51	AK 25 cutting depth: α_p 9 mm							
Ø 75,00 - Ø 80,99	56		A 21 016.4595.T	M5x10 *T20*	M6x16 DIN 6912	FL 14 / *R 30*	M6x12 *T20*	21 016.9260.A	RF 84
Ø 81,00 - Ø 90,99	62								
Ø 91,00 - Ø 98,99	68								RF 85
Ø 99,00 - Ø 110,99	75								
Ø 111,00 - Ø 122,99	82					FL 18 / *R 40*			
Ø 123,00 - Ø 134,99	94								
Ø 135,00 - Ø 148,99	106	AK 40 cutting depth: α_p 14 mm							RF 86
Ø 149,00 - Ø 161,99	118								
Ø 162,00 - Ø 173,99	130		A 28 016.4597.P	M6x14 *T20*	M8x20 DIN 6912	FL 18 / *R 65*	M6x16 *T20*	28 017.0472.B	RF 87
Ø 174,00 - Ø 185,99	142								
Ø 186,00 - Ø 197,99	154								
Ø 198,00 - Ø 209,99	166					FL 18 / *R 90*			RF 88
Ø 210,00 - Ø 221,99	178								
Ø 222,00 - Ø 233,99	190								

Additional diameters on request

See Page 6/7 for spare and wear parts ordering data

BTA-TIEFBOHRSYSTEME GMBH | HAINKÄMPE 12 | 28832 ACHIM
TEL +49 (0) 42 02 / 96 84 5 | FAX +49 (0) 42 02 / 96 84 70 | INFO@BTA-TIEFBOHRSYSTEME.COM | **WWW.BTA-TIEFBOHRSYSTEME.COM**

Counter Boring Tools Type 1108 - „pulled“

Boring Range Ø 44,00 - 185,99 mm

These counter boring tools are only for pull boring operations. This operation minimizies the mismatch of axes.

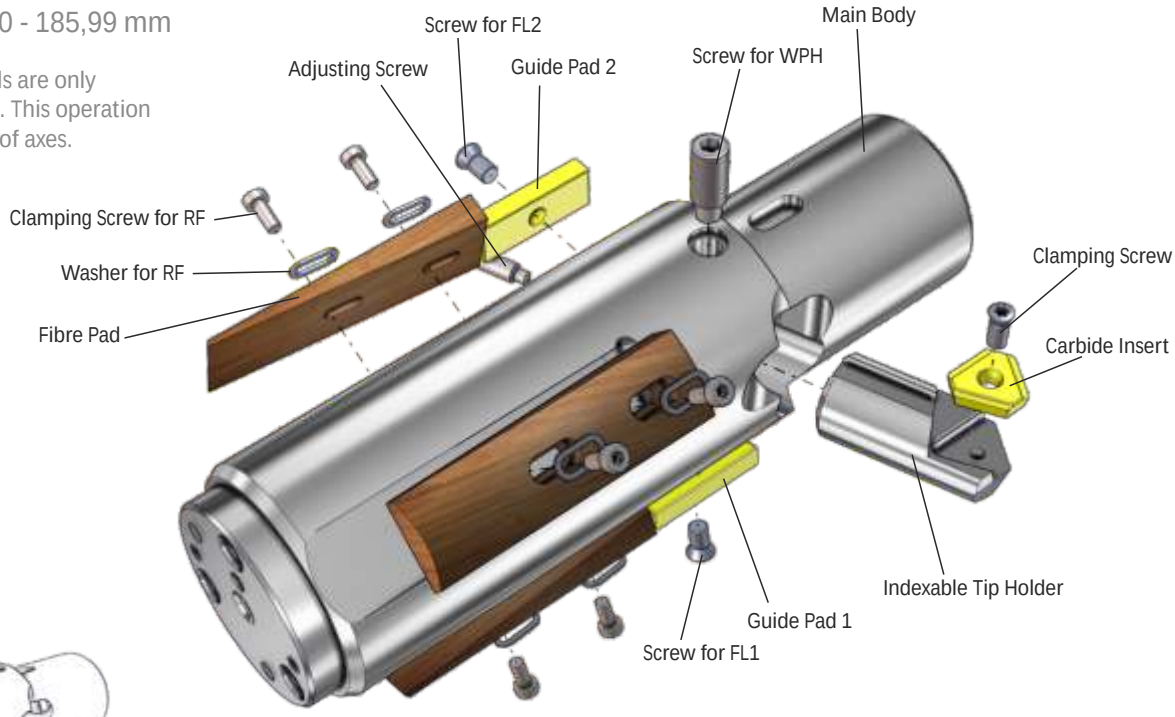

Boring Range	Drill Tube Connection	Carbide Insert pos.1	Indexable Tip Holder	Clamping Screw	Guide Pad FL1 and FL2	Clamping Screw	Fibre Pads
Ø 44,00 - Ø 46,99	36	AKz 16 cutting depth: α_p 5 mm	AKz 16 011.3053.V	M4x7,5 *T15*	FL 10 / *R 20*	M4x8,2 *T15*	RF 82
Ø 47,00 - Ø 56,99	39						
Ø 57,00 - Ø 60,99	43						RF 83
Ø 61,00 - Ø 67,99	47				FL 10 / *R 28*		
Ø 68,00 - Ø 74,99	51	AKz 25 cutting depth: α_p 9 mm	AKz 25 011.3054.T	M5x10 *T20*	FL 14 / *R 30*	M6x16 *T20*	RF 84
Ø 75,00 - Ø 80,99	56						
Ø 81,00 - Ø 90,99	62						RF 85
Ø 91,00 - Ø 98,99	68						
Ø 99,00 - Ø 110,99	75						
Ø 111,00 - Ø 122,99	82	AKz 40 cutting depth: α_p 14 mm		M6x14 *T20*	FL 18 / *R 40*	M6x16 *T20*	
Ø 123,00 - Ø 134,99	94						
Ø 135,00 - Ø 148,99	106		AKz 32 011.3055.R		FL 18 / *R 65*		RF 86
Ø 149,00 - Ø 161,99	118						
Ø 162,00 - Ø 173,99	130						RF 87
Ø 174,00 - Ø 185,99	142						

Additional diameters on request

See Page 6/7 for spare and wear parts ordering data

Spare and wear parts

Indexable Inserts Size AK 16 - AK 40

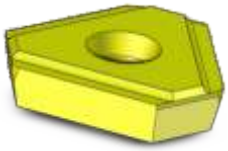

Description	Chip Breaker	Carbide		
		P20 TiN	K10 TiN	K10
AK 16	Size 1 - 1,8x0,6	011.2840.B	018.7016.T	011.2802.K
AK 25	Size 1 - 2,1x0,6	011.2842.W	013.9684.M	011.2778.D
AK 40	Size 1 - 2,5x0,8	011.2844.S	013.9685.K	011.2779.B

Additional chip breakers and coatings on request

Indexable Inserts Size AKz 16 - AKz 40

Description	Chip Breaker	Carbide		
		P20 TiN	K10 TiN	K10
AKz 16	Gr.1 - 1,8x0,6	011.3663.R	018.3295.S	015.1863.S
AKz 25	Gr.1 - 2,1x0,6	011.3664.P	017.3364.N	011.3915.Q
AKz 40	Gr.1 - 2,5x0,8	011.3665.M	018.8265.U	014.2745.A

Additional chip breakers and coatings on request

Guide Pad 1 and 2

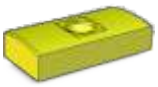

Description	Radius	Carbide		Shoes for Guide Pads	Screws for Shoes
		TiN coated	ML coated		
FL 10	20	016.9223.G	019.6679.K	-	-
	28	016.9226.A	019.6680.L		
FL 14	30	016.9229.T	019.6681.M		
FL 18	40	014.4761.R	019.6682.N	017.0631.H	008.5019.W
	65	016.9238.S	019.6683.P		

BTA-TIEFBOHRSYSTEME GMBH | HAINKÄMPE 12 | 28832 ACHIM
TEL +49 (0) 42 02 / 96 84 5 | FAX +49 (0) 42 02 / 96 84 70 | INFO@BTA-TIEFBOHRSYSTEME.COM | **WWW.BTA-TIEFBOHRSYSTEME.COM**

Spare and wear parts

Fibre pads RF 82 to RF 90

Description	Ident-No. Fibre	Washer	Screws for Fibre Pad
RF 82	018.4000.B	011.2044.C	M4x8 DIN7984
RF 83	018.4001.C		M4x10 DIN7984
RF 84	018.4002.D		
RF 85	018.4003.E	011.2043.E	M6x12 DIN7984
RF 86	018.4004.F		
RF 87	018.4005.G		
RF 88	018.4006.H	011.2042.G	M10x16 DIN7984
RF 89	011.9935.B		
RF 90	011.9936.Z		

Notice: The fibre pads are wear parts, and are supplied oversize. To achieve the correct diameter they will have to be turned to size once mounted in the tool.

Standard placement: 3 pieces per tool.

Torx-Screws

Size	Length	Ident-No. Clamping Screw	Torx Size	Ident-No. Torx-Wrench
M4	7,5	011.2416.Q	T15	008.7219.C
	8,2	008.1066.J		
M5	10	011.2061.C		
	12	011.2060.E		
M6	12	008.1068.E	T20	008.7220.T
	14	016.4592.A		
	16	010.7708.F		

Socket Head Cap Screw

Size	Length	Ident-No. Clamping Screw	SW Size	Ident-No. Hexagon Wrench
M4 / DIN 7984	10	008.5000.U	SW 2,5	008.5836.M
M4 / DIN 6912	12	008.5001.S	SW 3	008.7213.Q
M6 / DIN 7984	10	008.5019.W	SW 4	008.5837.K
	12	008.5020.N		
M6 / DIN 6912	16	008.5021.L	SW 5	008.6948.U
M8 / DIN 6912	20	008.5031.H	SW 6	008.5849.C
M10 / DIN 7984	16	008.5042.L	SW 7	008.5840.W

TiefbohrSysteme® GmbH

DEEP HOLE BORING TECHNOLOGY | EQUIPMENT

Counter Boring Tools

Type 1105

DEEP HOLE BORING TOOLS
BORING RANGE Ø 150,00 - 401,99 mm

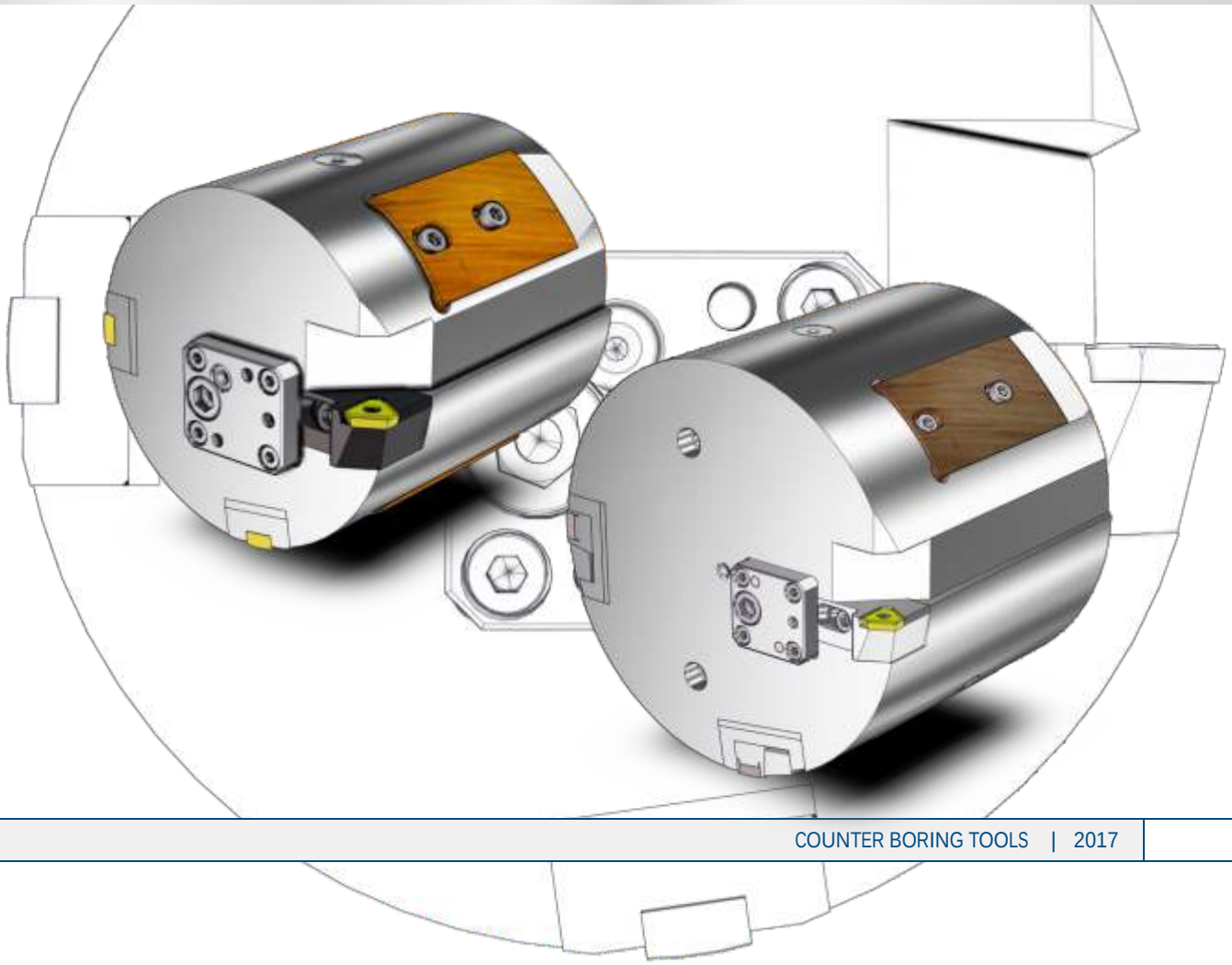

Deep Hole Boring - An Inaccessible World

In today's production world, precision and production strategies are a significant constituent for success. The more complex the production process, the more important are these two factors. deep hole boring our company, BTA-Tiefbohrsysteme GmbH, is the essential partner for implementation even under difficult marginal conditions with high requirements. We are the only company in the world capable of offering our customers everything from inserts to complete, suitable equipent for deep hole boring machines. Our experienced experts are always at your side to ensure proper support from planning your deep hole boring project up to tool services. All this is aimed at your success.

In the company-owned application and research department we can test innovations and special designed tools, customize the tools to user-specific material and train their operators. You will receive tools customized for your application and benefit from our experience.

Our tool systems offer you the following advantages:

- Tools designed for various processes (solid boring, trepanning, counter boring and skiving) with the same effective elements, especially such as inserts and guides. This results in extremely low stocks and simple handling.
- Suitable selection possibilities for tools, corresponding to required boring quality, from simple solid boring to form boring.
- Custom layout of tools for various production requirements to straightness, surface, material and constant wall thickness.
- Equipment matched to the deep hole boring process - from workpiece clamping to vibration damping.
- Production-optimized machinery layout for reducing setup and conversion times.

Here are a few results from production boring with our tools:

- Surface Ra < 0.1 µm e.g. by skiving and roller burnishing
- Mismatch of axes < 0.1mm/m e.g. by pull counter boring
- Hole accuracy < IT8 e.g. by skiving

Benefit from these advantages by cooperating with a strong partner.

BTA-Tiefbohrsysteme GmbH

BTA-TIEFBOHRSYSTEME GMBH | HAINKÄMPE 12 | 28832 ACHIM
TEL +49 (0) 42 02 / 96 84 5 | FAX +49 (0) 42 02 / 96 84 70 | INFO@BTA-TIEFBOHRSYSTEME.COM | **WWW.BTA-TIEFBOHRSYSTEME.COM**

Contents

Contents	3
Counter Boring Tools Type 1105	4
Spare and wear parts	6
Conversion instructions	7

Tool characteristics

- drilling depth up to 400 x tool diameter
- surface up to R_a 1,25 µm
- mismatch of axes up to 0,05mm/m
- drilling accuracy up to IT8

Counter Boring Tools Type 1105

Boring Range Ø 150,00 - 401,99 mm

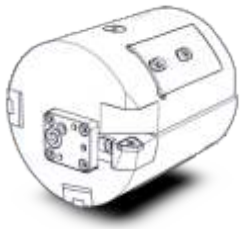
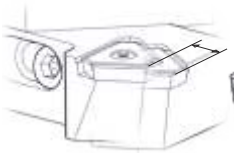

Boring Range	Drill Tube Connection	max. adjustment in diameter	Carbide Insert pos.1	Indexable Tip Holder	Clamping Screw	Guide Pad FL1 and FL2	Clamping Screw for FL/KL	Wedge
Ø 150,00 - Ø 161,99	118	+ 10 mm						
Ø 162,00 - Ø 173,99	130					FL 18 / *R 65*		
Ø 174,00 - Ø 185,99	142							
Ø 186,00 - Ø 197,99	154						M6x16 *T20*	-
Ø 198,00 - Ø 209,99	166					FL 18 / *R 90*		
Ø 210,00 - Ø 221,99	178							
Ø 222,00 - Ø 233,99	190							
Ø 234,00 - Ø 245,99	202					FL 30 / *R 100*		
Ø 246,00 - Ø 257,99	214							
Ø 258,00 - Ø 269,99	226		AK 40	AK 40				
Ø 270,00 - Ø 281,99	238	+ 20 mm	cutting depth:	013.9437.F	M6x14 *T20*	FL 30 / *R 125*		
Ø 282,00 - Ø 293,99	250		α_p = 14 mm					
Ø 294,00 - Ø 305,99	262							
Ø 306,00 - Ø 317,99	274						M10x16 DIN7984	010.2310.P
Ø 318,00 - Ø 329,99	286					FL 30 / *R 150*		
Ø 330,00 - Ø 341,99	298							
Ø 342,00 - Ø 353,99	310							
Ø 354,00 - Ø 365,99	322							
Ø 366,00 - Ø 377,99	334					FL 30 / *R 170*		
Ø 378,00 - Ø 389,99	346							
Ø 390,00 - Ø 401,99	358					FL 30 / *R 190*		

Additional diameters on request

See Page 6 for spare and wear parts ordering data

Note: Please activate the two-sided view so that the table is displayed completely.

BTA-TIEFBOHRSYSTEME GMBH | HAINKÄMPE 12 | 28832 ACHIM
TEL +49 (0) 42 02 / 96 84 5 | FAX +49 (0) 42 02 / 96 84 70 | INFO@BTA-TIEFBOHRSYSTEME.COM | **WWW.BTA-TIEFBOHRSYSTEME.COM**

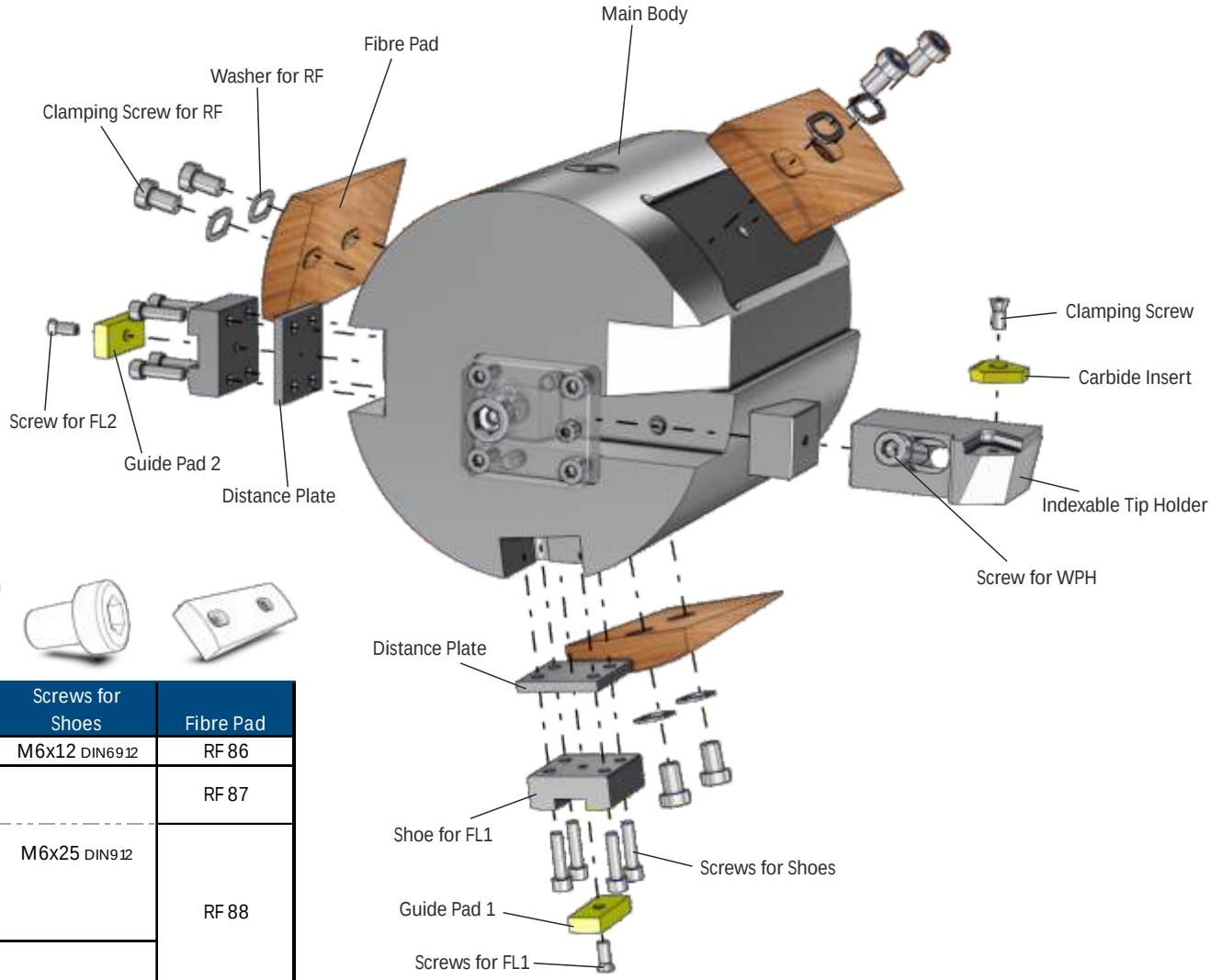

Shoe for Guide Pad	Screws for Shoes	Fibre Pad
016.9962.Q	M6x12 DIN6912	RF 86
		RF 87
018.9434.M	M6x25 DIN912	RF 88
011.2270.S	M6x30 DIN912	RF 89
		RF 90

Spare and wear parts

Indexable Insert AK 40

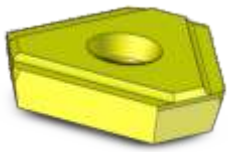

Description	Chip Breaker	Carbide		
		P20 TiN	K10 TiN	K10
AK 40	Gr.1 - 2,5x0,8	011.2844.S	013.9685.K	011.2779.B

Additional chip breaker and coatings on request

Guide Pad 1 and 2

Description	Radius	Carbide	
		TiN coated	ML coated
FL 18	65	016.9238.S	019.6683.P
	90	019.2768.L	019.6684.Q

Description	Radius	Ident-No.
FL 30	100	010.2425.V
	125	010.2426.T
	150	010.2427.R
	170	010.2428.P
	190	010.2429.M

Fibre Pads RF 86 to RF 90

Description	Ident-No. Hartgewebe	Washer	Screws
RF 86	018.4004.F	011.2043.E	M6x16 DIN6912
RF 87	018.4005.G		
RF 88	018.4006.H	011.2042.G	M10x16 DIN7984
RF 89	011.9935.B		
RF 90	011.9936.Z		

Notice: The fibre pads are wear parts, and are supplied oversize. To achieve the correct diameter they will have to be turned to size once mounted in the tool.

Standard placement: 3 pieces per tool.

BTA-TIEFBOHRSYSTEME GMBH | HAINKÄMPE 12 | 28832 ACHIM
TEL +49 (0) 42 02 / 96 84 5 | FAX +49 (0) 42 02 / 96 84 70 | INFO@BTA-TIEFBOHRSYSTEME.COM | **WWW.BTA-TIEFBOHRSYSTEME.COM**

Spare and wear parts

Torx-Screws

Size	Length	Ident-No. Clamping Screw	Torx Size	Ident-No. Torx-Screw
M6	14	016.4592.A	T20	008.7220.T
	16	010.7708.F		

Socket Head Cap Screws

Size	Length	Ident-No. Clamping Screw	SW Size	Ident-No. Hexagon Wrench
M6 / DIN 7984	12	008.5020.N	SW 4	008.5837.K
M6 / DIN 6912	16	008.5021.L	SW 5	008.6948.U
M6 / DIN 912	25	008.5123.C		008.5838.H
	30	008.5124.A		
M10 / DIN 7984	16	008.5042.L	SW 7	008.5840.W

Conversion instructions

To the remodeling of the counter boring tools on another diameter conversion kits are required, which consist of the following components:

- The diameter at a height corresponding distance plates and shoes for the guide pads.
- A the diameter range of the head associated wedge for insert holders.
- Excessive fibre pads (turning to the correct diameter necessary).

The setting of the holder via the measuring from cutting to opposite guide pad.
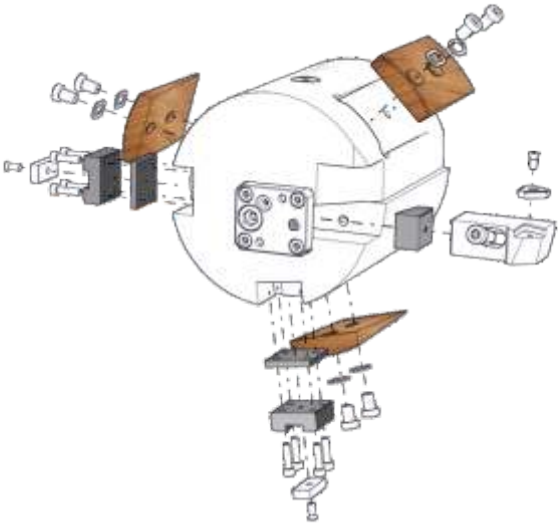
Different or larger diameter ranges and specific features of counter boring tools on request.